On the Atrial Fibrillation Detection Performance of ECG-DualNet

IEEE EMBC 2023

TECHNISCHE UNIVERSITÄT DARMSTADT

Christoph Reich, Maurice Rohr, Tim Kircher, and Christoph Hoog Antink
KIS*MED – AI Systems in Medicine, Technische Universität Darmstadt, Germany

Motivation

- Atrial Fibrillation (AF) affects a significant amount of the human population and is often undetected
- Undetected AF significantly increases the risk for severe sequelaes such as strokes or heart failure
- Quick AF diagnosis is key for reducing the risk of sequelaes
- Automated AF detection, when accurate, can be a powerful tool to facilitate quick AF diagnosis

Introduction

This work analyzes the AF detection performance of ECG-DualNet & answers:

- Does scaling the model size improve downstream performance when only limited data is available?
- Which ingredients of ECG-DualNet are crucial for achieving competitive AF detection results?
- Can large-scale pre-training improve downstream performance on PhysioNet/CinC Challenge 2017?

Supervised Pre-Training Results

- We perform large-scale pre-training on the Icentia11k dataset [6]
- After pre-training we fine-tune on the PhysioNet dataset.

Model	ACC ↑	F1 ↑
ECG-DualNet XL	0.8468 (↓ 0.0144)	0.8014 (↓ 0.0150)
ECG-DualNet++ XL	0.8527 (↓ 0.0066)	0.7965 (↓ 0.0086)

Tab. 2: Results on PhysioNet w/ pre-training.

Large-scale supervised pre-training on Icentia11k does not lead to improvements

ECG-DualNet Architecture

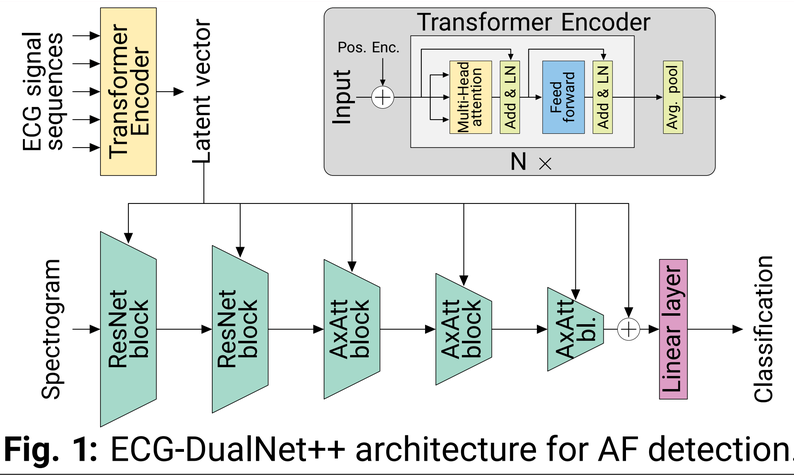

Fig. 1: ECG-DualNet++ architecture for AF detection.

ECG-DualNet [1] consists of two parts:

- Signal encoder
  - Encodes the time domain ECG signal
- Spectrogram encoder
  - Encodes the frequency domain ECG signal (spectrogram)

ECG-DualNet LSTM encoder + ResNet
ECG-DualNet++ Transformer enc. [2] + Axial-At. [3]

Scaling Results

Model	ACC ↑	F1 ↑	FLOP	# Parameters
ECG-DualNet S	0.8527	0.8049	0.31G	1.8M
ECG-DualNet M	0.8560	0.7938	1.04G	4.3M
ECG-DualNet L	0.8514	0.8038	3.19G	6.2M
ECG-DualNet XL	**0.8612**	**0.8164**	12.50G	20.7M
ECG-DualNet++ S	0.8174	0.7291	0.72G	1.8M
ECG-DualNet++ M	0.8259	0.7730	1.24G	2.6M
ECG-DualNet++ L	0.8449	0.7859	2.94G	3.7M
ECG-DualNet++ XL	*0.8593*	*0.8051*	9.77G	8.2M
ECG-DualNet++ 130M	0.8534	0.7963	295.04G	128.0M

Tab. 1: Classification (four classes) results on PhysioNet dataset [4].

- Both ECG-DualNet & ECG-DualNet++ benefit from scaling
- Overparameterization does not lead to overfitting (double decent [5])

Scaling the model size improves performance

Ablation Results

Spectrogram encoder	Data aug. & dropout	Signal encoder	ACC ↑	F1 ↑
✗	✓	✓	0.7264	0.5813
✓	✗	✓	0.8272	0.7493
✓	✓	✗	0.8440	0.7855
✓	✓	✓	**0.8514**	**0.8038**

Tab. 3: Ablation study on PhysioNet dataset w/ ECG-DualNet L.

- All main components lead to performance improvements
- The signal encoder's contribution is the smallest

The most crucial part of ECG-DualNet is the spectrogram encoder

References

[1] M. Rohr, C. Reich *et al.*, "Exploring Novel Algorithms for Atrial Fibrillation Detection by Driving Graduate Level Education in Medical Machine Learning," *Physiol. Meas.*, 2022.
[2] A. Vaswani, N. Shazeer, N. Parmar, J. Uszkoreit, L. Jones, A. N. Gomez, L. u. Kaiser, and I. Polosukhin, "Attention is All you Need," in *NIPS*, vol. 30, 2017.
[3] H. Wang, Y. Zhu, B. Green, H. Adam, A. Yuille, and L.-C. Chen, "Axial-DeepLab: Stand-Alone Axial-Attention for Panoptic Segmentation," in *ECCV*, 2020, pp. 108–126.
[4] G. D. Clifford, C. Liu, B. Moody *et al.*, "AF Classification from a Short Single Lead ECG Recording: the PhysioNet/Computing in Cardiology Challenge 2017," in *CinC*, 2017, pp. 1–4.
[5] M. Belkin, D. Hsu, S. Ma, and S. Mandal, "Reconciling modern machine-learning practice and the classical bias–variance trade-off," *PNAS*, vol. 116, no. 32, pp. 15 849–15 854, 2019.
[6] S. Tan, G. Androz, A. Chamseddine *et al.*, "Icentia11K: An Unsupervised Representation Learning Dataset for Arrhythmia Subtype Discovery," *arXiv:1910.09570*, 2019.
[7] J. Lee-Thorp, J. Ainslie *et al.*, "FNet: Mixing Tokens with Fourier Transforms," *arXiv:2105.03824*, 2021.
[8] J. Gou, B. Yu, S. J. Maybank, and D. Tao, "Knowledge Distillation: A Survey," *Int. J. Comput. Vis.*, vol. 129, pp. 1789–1819, 2021.

Conclusion

- Representing ECG data in the frequency domain is, in particular, suitable for AF detection with deep networks, incorporating the frequency domain into the network's architecture might be effective (*c.f.* Lee *et al.* [7])
- We suspect a too significant domain shift between PhysioNet and Icentia11K leading to no performance improvements when pre-training
- Scaling model size combined with knowledge distillation [8] might be a potential avenue towards very efficient AF detection

Paper: `https://doi.org/10.1101/2023.06.01.23290822`
Code: `https://github.com/ChristophReich1996/ECG_Classification`
Correspondence: `hoogantink@kismed.tu-darmstadt.de`

Acknowledgement. Christoph Reich acknowledges the support of NEC Laboratories America, Inc.

KIS*MED